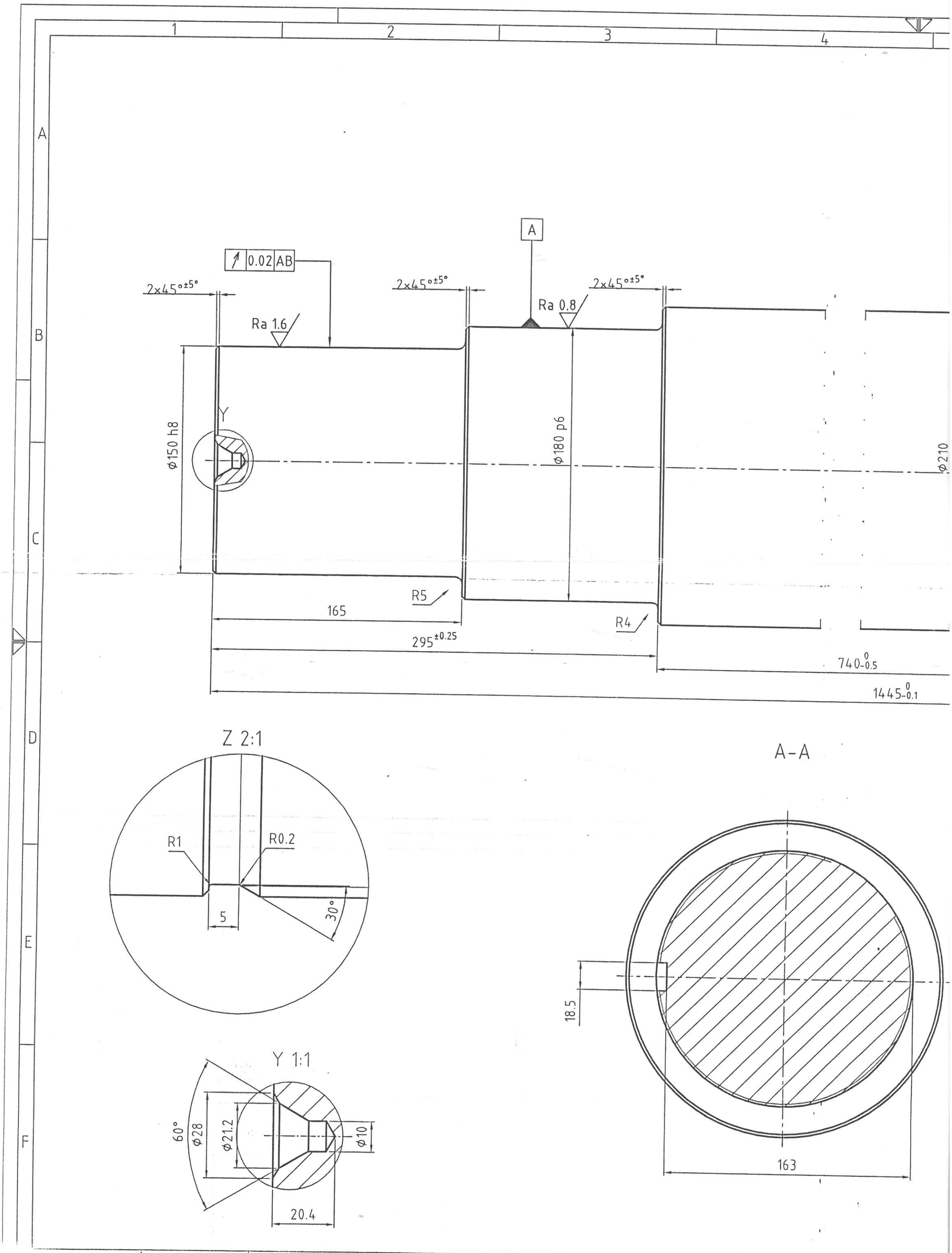
0.02 AB
A
2×45°±5°
2×45°±5°
2×45°±5°
Ra 1.6
Ra 0.8
Y
ϕ150 h8
ϕ180 p6
ϕ210
R5
R4
165
295±0.25
740 0 -0.5
1445 0 -0.1
Z 2:1
R1
R0.2
5
30°
A-A
18.5
163
Y 1:1
60°
ϕ28
ϕ21.2
ϕ10
20.4